DANAK
PROD Reg. No. 7026

FORCE Certification

EU-Type Examination Certificate

Measuring Instrument Directive

Certificate number: DK-0200-MI004-037

Issued by FORCE Certification A/S, Denmark
EU-notified body number 0200

In accordance with Annex II Module B of the Directive 2014/32/EU of the European Parliament and of the Council of 26 February 2014 on the harmonization of the laws of the Member States relating to the making available on the market of measuring instruments (MID).

Issued to: **Kamstrup A/S**
Industrivej 28, Stilling
DK-8660 Skanderborg
Denmark

Type of instrument:	Thermal energy meter
Type designation:	MULTICAL® 403 (types: 403-V/W/T/C)
Valid until:	2032-11-23
Number of pages:	22, including appendix
Date of issue:	2025-05-22
Version:	19 This new version of DK-0200-MI004-037 is issued due to addition of a new software version, minor editorial changes and extension of the validity date. The previous certificate is withdrawn.

Approved by

Michael Møller Nielsen
Certification Manager

Processed by

Lars Poder
Examiner

The conformity markings may only be affixed to the above type approved equipment. The manufacturer's Declaration of Conformity may only be issued and the notified body identification number may only be affixed on the instrument when the production/product assessment module (D or F) of the directive is fully complied with and controlled by a written inspection agreement with a notified body. This EU-type examination certificate may not be reproduced except in full, without written permission by FORCE Certification A/S.

FORCE Certification references:
TASK No.: 125-26695.01 and ID No.: 0200-MID-06430-19

Appendix to

EU-Type Examination Certificate
Measuring Instrument Directive

Number: DK-0200-MI004-037
Issued by FORCE Certification A/S, Denmark
EU-notified body number 0200

Revision	Issue date	Changes
DK-0200-MI004-037	2016-02-26	Original certificate.
DK-0200-MI004-037 rev 1	2016-04-19	Two new software versions added.
DK-0200-MI004-037 ver 2	2016-05-26	New software version added.
DK-0200-MI004-037 ver 3	2017-02-23	New software version added, new flow sensor type added (type 6X), new modules added (module type 40 + 67).
DK-0200-MI004-037 ver 4	2017-05-18	New modules added (module type 22 + 31 + 66).
DK-0200-MI004-037 ver 5	2018-01-04	New modules added (module type 42 + 50), minor editorial corrections.
DK-0200-MI004-037 ver 6	2018-02-15	New software version added, new type variant 403-C added.
DK-0200-MI004-037 ver 7	2018-10-26	New modules added (module type 43 + 51).
DK-0200-MI004-037 ver 8	2018-11-26	Replacement certificate issued due to an error in the DANAK logo on page 8 - 17 in version 7.
DK-0200-MI004-037 ver 9	2019-05-06	New software version added, new modules added (module type 32 + 33), temperature difference cut-off added, 'Security measures' section updated.
DK-0200-MI004-037 ver 10	2019-08-21	Minor editorial changes.
DK-0200-MI004-037 ver 11	2021-02-18	Editorial changes, new modules added (module type 53 + 56 + 82 + 83), changes regarding instrument types.
DK-0200-MI004-037 ver 12	2022-05-17	New WELMEC 7.2:2021, EN 1434:2007/AC:2007 and FprEN 1434:2022 from 2022-04, fast response, new module 81 and calibration unit added. Editorial changes.
DK-0200-MI004-037 ver 13	2022-08-26	New software version, class E2 added and minor editorial changes.
DK-0200-MI004-037 ver 14	2022-09-07	New software version added.
DK-0200-MI004-037 ver 15	2022-11-23	New software version, new communication module and new versions of WELMEC and EN 1434 added.
DK-0200-MI004-037 ver 16	2023-02-02	New software version, added OIML R 75:2002 reference and minor editorial changes.
DK-0200-MI004-037 ver 17	2023-04-19	New software version added.
DK-0200-MI004-037 ver 18	2024-03-22	Minor editorial changes.
DK-0200-MI004-037 ver 19	2025-05-22	New software version J1 added, minor editorial changes and extension of the validity date.

Applied standards and documents:

- EN 1434:2007/AC:2007
- EN 1434:2015+A1:2018
- EN 1434:2022
- WELMEC 7.2:2023 (from May 2024)
- OIML R 75:2002

The instruments/measuring systems shall correspond with the following specifications:

Type designation:

MULTICAL® 403 (types: 403-V/W/T/C)

Description:

The meter consists of a calculator and a flow sensor, which make out a heat meter together with a type approved Pt100 or Pt500 temperature sensor pair.
The electrical connection between the calculator and the flow sensor is a 150 cm long cable, and the units can either be physically assembled or mounted separately.
The calculator unit has a display indicating registered thermal energy, and additionally via two pushbuttons also accumulated volume, operating hour counter, inlet and outlet temperatures etc.
The calculator can be retrofitted with various approved plug-in modules, e.g. pulse and wM-Bus modules (see page 9). The modules are mounted under the top cover of the calculator without subsequent re-verification.
The volume measurement is made by means of bidirectional ultrasonic technique according to the transit time method. Through two ultrasonic transducers, the sound signals are sent both with and against the flow direction. The flow sensor consists of a meter case made of brass or stainless steel, in which the ultrasonic elements are placed. Above the meter case a two-parted plastic cabinet with a rail for possible mounting of the calculator is mounted.

Technical documentation:

Reference No.:

- 125-26695.01
- 121-22165.08
- 121-22165.07
- 121-22165.06
- 121-22165.05
- 121-22165.04
- 121-22165.03
- 121-22165.02
- 121-22165.01
- 118-20739.07
- 118-20739.06
- 118-20739.05
- 118-20739.04
- 118-20739.03
- 118-20739.02
- 117-22769.02.02
- 117-22769.01.02
- 114-33017.04.15
- 114-33017.04.14
- 114-33017.04.13

Technical data

Legal measuring data according to		: EN 1434:2007/AC:2007 : EN 1434:2015+A1:2018 : EN 1434:2022 : OIML R 75:2002
Instrument type		: Complete instrument or : Combined instrument or : Hybrid instrument
Parts:		
- Calculator and flow sensor or		: DK-0200-MI004-037
- Calculator, flow and temp. sensor		: DK-0200-MI004-037, -036 or -046
Accuracy class		: 2 and 3
Environment class		: E1 and E2, M1 and M2
Climatic class		: 5...55 °C, non-condensing, closed location : 5...55 °C, condensing, closed location
Protection class		: Flow sensor IP68 : Calculator IP54
Energy indication		: kWh, MWh or GJ
Temperature range, calculator	θ_{min} ... θ_{max}	: 2...180 °C (or narrower range)
Temperature difference range	$\Delta\Theta_{min}$ ... $\Delta\Theta_{max}$	: 3...178 K (or narrower range)
Temperature difference cut-off		: 0.00...2.50 K configurable (default 0.00 K)
Temperature sensors		: 2 paired Pt500 or Pt100 sensors, depending on type. Max. 10 m un-shielded 2-wire cable
Flow sensor, position		: Inlet or outlet pipe
Straight inlet requirement		: 0D (No requirements for straight inlet)
Installation angle for flow sensor		: Horizontally, vertically or at an angle
Temperature of medium flow sensor	θ_q	: 2...130 °C (or narrower range), 403-V/W/T 2...50 °C (or narrower range), 403-C
Pressure stage		: PN16/PN25, PS25
Nominal volume flow rate	q_p [m³/h]	: 0.6 1.5 2.5 3.5 6 10 15
Pressure loss	Δp [bar]	: 0.03 0.09 0.09 0.07 0.06 0.06 0.14
Dynamic range, q_p 0.6	q_p:q_i	: 100:1 or 50:1
Dynamic range, q_p 1.5 -2.5 -3.5 -6 -10 -15	q_p:q_i	: 250:1 or 100:1 or 50:1
	q_s:q_p	: 2:1
Durability specification		: Minimum 10 years (Long life flow sensor)
Fast response meter (config L=3 or L=7)		: DS temp. sensor response time $\tau_{0.5} \leq 2.5$ s : Temperature sampling interval ≤ 4 s : Volume sampling interval ≤ 1 s : Integration time ≤ 4 s

Technical data

Provision for direct temperature (DS) sensor in the flow sensor (M10x1 connection)	: G¾ - G1 – G5/4 – G2 – DN25 – DN40 Threaded and flanged flow sensors
Power supply options	: 230 VAC with transformer, 48...62 Hz : 24 VAC with transformer, 48...62 Hz : 230 VAC Switch mode supply : 24 VDC/VAC Switch mode supply : 3.65 VDC, Lithium battery 1 x D-cell, 1 x C-cell IoT or 2 x A-cell

Software identification

Software revision	J1(1001)					1	0	0	1
Kamstrup Internal Item No.	50981746	1	7	4	6				
Software Identification		1	7	4	6	1	0	0	1

The Software identification and checksum can be shown on the display of the meter (display No. 10 and No. 11)

Software Identification	Date	CRC-16 sum[1)]	Description
11630801 (H1)	2016-01-25	53579	N: First release for type approval.
11630802 (H2)	2016-01-25	52804	N: Second release for type approval. Copy of 11630801 for the purpose of demonstration of software download.
11631001 (J1)	2016-03-17	21922	N: First release for production
11631101 (K1)	2016-03-30	49192	N: Second release for production
11631201 (L1)	2016-05-13	29840	N: Third release for production
11631301 (M1)	2017-01-11	64185	N: Fourth release for production
14540101 (A1)	2018-01-12	29700	N: Fifth release for production
14540201 (B1)	2019-04-12	5347	N: Sixth release for production

Software Identification	Date	CRC-32 sum[1)]	Description
14540301 (C1)	2021-11-08	4367942F	N: Seventh release for production
17460101 (A1)	2022-04-06	658FFd0F	L: Internal R&D release for type test
17460201 (B1)	2022-05-16	1d97EFEb	N: Internal R&D optimization release
17460301 (C1)	2022-06-02	Fb0643E2	N: Internal R&D release for type test
17460401 (D1)	2022-08-08	dE0E53c7	N: Eighth release for production
17460501 (E1)	2022-08-30	34F9999d	N: Ninth release for production
17460601 (F1)	2022-11-07	b103Fbdb	N: Tenth release for production
17460701 (G1)	2023-01-18	A4678668	N: Eleventh release for production
17460801 (H1)	2023-03-03	b51514d6	N: Twelfth release for production
17461001 (J1)	2025-05-07	D8586C53	N: Thirteenth release for production

[1)] The CRC-16 is displayed in decimal and the CRC-32 is displayed in hexadecimal values. The CRC-32 is shown in upper/lower case as the letters appears on the meters 7-segment display.
N: Non-legally Relevant Software change
L: Legally Relevant Software change

Only for member states where software download is allowed

Software download according to WELMEC 7.2

The meter is approved for software download, both direct (via cable) and remote (via wireless). The software download function is separated between legally relevant (the software in the meter) and legally non-relevant software (the software in the communication module). The software separation is implemented via hardware separation, whereby the level of separation exceeds Extension S. The meter is a Type P instrument and Risk Class C applies.

The legally relevant software download function can be disabled for use in member states where software download for instruments in use is not allowed. In this case download of legally relevant software cannot be done without breaking the verification seal.

Type number combination MULTICAL® 403

			Static data **403-XXXXXX** Printed on the meter				*Dynamic data* - **XXXXX** Displayed		
		Type 403-	□	□□	□	□□	□□	□	□□
Sensor connection									
Pt100 Heat meter			V						
Pt500 Heat meter			W						
Pt500 Heat/Cooling meter			T						
Pt500 Heat/Cooling meter			C						
Flow sensor q_p [m³/h]	Connection	Length [mm]							
0.6	G¾B (R½)	110		1X					
0.6	G1B (R¾)	190		3X					
1.5	G¾B (R½)	110		4X					
1.5	G¾B (R½)	165		5X					
1.5	G1B (R¾)	110		6X					
1.5	G1B (R¾)	130		7X					
1.5	G1B (R¾)	165		8X					
1.5	G1B (R¾)	190		9X					
2.5	G1B (R¾)	130		AX					
2.5	G1B (R¾)	190		BX					
3.5	G1¼B (R1)	260		DX					
6.0	G1¼B (R1)	260		FX					
6.0	DN25	260		GX					
10	G2B (R1½)	300		HX					
10	DN40	300		JX					
15	DN50	270		KX					
Meter type									
Heat meter (MID module B, prepared for module F)					1				
Heat meter (MID module B+D)					2				
Heat meter with additional cooling register (MID module B+D) θ_{hc}=OFF					3				
Heat meter with additional cooling register (MID module B+D) θ_{hc}=ON					6				
Country code									
						XX			
Temperature sensor pair									
							XX		
Supply									
No supply								0	
Batteries, 2xA-cells								9	
Battery, 1xD-cell								2	
Battery, 1xC-cell IoT								6	
230 VAC high power supply								3	
24 VDC/VAC high power supply								4	
230 VAC supply								7	
24 VAC supply								8	

Type number combination MULTICAL® 403 - continued

	Static data **403-XXXXXX** Printed on the meter				*Dynamic data* - **XXXXX** Displayed		
Type 403-	□	□□	□	□□	□□	□	□□
Communication modules (1 module slot)							
No module							00
Data Pulse, inputs (In-A, In-B)							10
Data Pulse, outputs (Out-C, Out-D)							11
Wired M-Bus, inputs (In-A, In-B)							20
Wired M-Bus, outputs (Out-C, Out-D)							21
Wired M-Bus, Thermal Disconnect							22
Wireless M-Bus, inputs (In-A, In-B), 868 MHz							30
Wireless M-Bus, outputs (Out-C, Out-D), 868 MHz							31
LinkIQ/wM-Bus, Inputs (In-A, In-B), EU							32
LinkIQ/wM-Bus, Outputs (Out-C, Out-D), EU							33
Analog outputs 2 x 0/4...20 mA							40
KNX communication							42
PQT controller							43
Low Power Radio, inputs (In-A, In-B), 434 MHz							50
Low Power Radio GDPR, inputs (In-A, In-B), 434 MHz							51
LoRaWan (Elvaco), 868 MHz							53
NB-IoT, inputs (In-A, In-B)							56
NB-IoT (Elvaco)							58
BACnet MS/TP, inputs (In-A, In-B)							66
Modbus RTU, inputs (In-A, In-B)							67
BACnet IP, inputs (In-A, In-B)							81
Modbus/KMP TCP/IP, inputs (In-A, In-B)							82
READy Ethernet, inputs (In-A, In-B)							83

Verification

Errors:	[Maximum permissible errors according to Directive 2014/32/EU of the European Parliament and Council of February 26th, 2014 on measurement instruments (MID), Annex VI MI-004]
Procedure:	(Test points and verification requirements according to EN 1434-5)

Complete meter according to: [3.] (6.7)

Hybrid instrument according to: [7.1] (6.2), [7.2] (6.3), [7.3] (6.4), (6.5)

Alternative test points

	Inlet	Outlet		Inlet	Outlet		Inlet	Outlet
	a) 44.3 °C	41 °C	or	a) 43 °C	40 °C	or	a) 43 °C	40 °C
	b) 80 °C	65 °C		b) 50 °C	40 °C		b) 50 °C	40 °C
	c) 160 °C	20 °C		c) 130 °C	40 °C		c) 160 °C	40 °C

	Inlet	Outlet		Inlet	Outlet		Inlet	Outlet
or	a) 53 °C	50 °C	or	a) 43 °C	40 °C	or	a) 43 °C	40 °C
	b) 70 °C	50 °C		b) 110 °C	40 °C		b) 110 °C	40 °C
	c) 130 °C	20 °C		c) 130 °C	40 °C		c) 160 °C	40 °C

Tolerances on simulated temperatures: ± 1 °C. Tolerances on temperature differences shall follow EN 1434-5

During verification of the flow sensor a water temperature of 20 ± 5 °C can be used.

For dynamic ranges q_p:q_i 100:1 and 50:1, the dynamic range 100:1 can be used.
For dynamic ranges q_p:q_i 250:1 and 100:1 and 50:1, the dynamic range 250:1 can be used.

The temperature reading can be offset adjusted from -0.99...0.99 K, commonly for the inlet and outlet, in order to compensate for the sensor cable influence on the absolute temperature.
During change of temperature sensor pairs it is recommended to adjust to meters offset temperature according to the newly mounted sensor pair. Alternatively adjust the offset to 0.00 K whereby the function is disabled (OFF).
Example: If the temperature sensor pair has an error at +0.20 K at zero, then the meters offset should be -0.20 K in order to compensate.

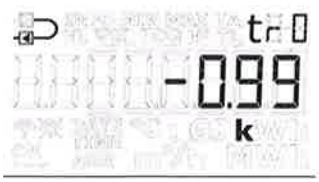

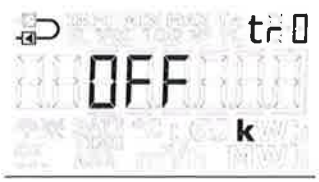

Installation angle

The flow sensor can be installed horizontally, vertically or at an angle

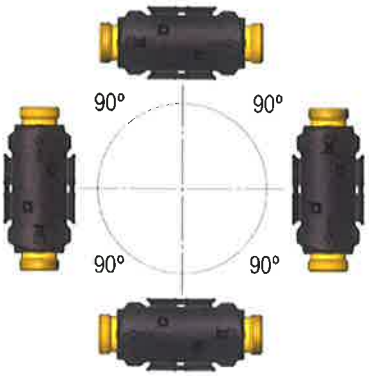

The flow sensor can be turned up to max. 45° and down to max. 90° in respect to the pipe axis.

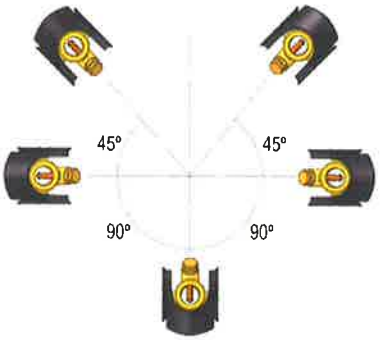

After verification, but before commissioning, the meter can be reprogrammed with a view to:

Placing of flow sensor in inlet pipe or outlet pipe, measuring unit of energy indication (kWh, MWh or GJ)* and decimal point in energy* and volume* indication*

Mounting the flow sensor in Inlet or in Outlet:

If the meter is set to be an inlet meter, the "Inlet arrow" is displayed.

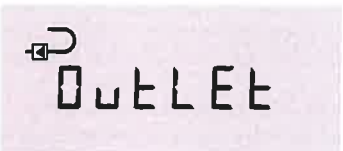

If the meter is set to be an outlet meter, the "Outlet arrow" is displayed.

*) Register resolution requirements according to EN 1434 must be observed

Test description

MULTICAL® 403 can be tested as a complete meter, as a hybrid meter or as a combined meter depending of the available test equipment.

Before test as a complete meter the top cover must be opened and the "TEST" seal must be broken (see "Test mode"). The high-resolution test registers can be read from the display, via serial data reading, or via high-resolution pulses.

Before test as a hybrid meter, the temperature sensors should be removed from MULTICAL® 403. Subsequently, the calculator is tested separately by means of precision resistors and the meter's built-in "Auto-integration". Flow sensor and temperature sensors are tested separately too.

By means of the push-buttons on the front of the meter you can choose between four display loops. No matter which display you have selected you can change to User-loop by pressing the left push-button for 5 sec. until "1-User" is displayed and then releasing the button. If the left button is pressed for 7 sec. instead, "2-Tech" is displayed, and if you release the push-button now, you have access to Tech loop.

In order to obtain quick test/verification of MULTICAL® 403, the meter has a test mode which repeats the measuring sequence every four seconds, i.e. eight times faster than in normal mode. In test mode heat energy, cooling energy and volume are displayed with a resolution which is higher than normal in order to enable shorter test duration.

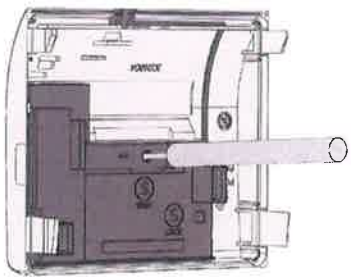

In order to access test mode the "TEST" seal Ⓢ on the back of the meter must be carefully broken with a screwdriver and the contact points behind the seal short-circuited with a short-circuit pen or a screwdriver.

Subsequently, test is displayed.

The meter remains in test mode until the front button is activated for 5 sec. However, a time-out secures that the meter returns from test mode to normal mode after 9 hours.
When tests are finished the seal must be re-established using a void label size 15 x 15 mm. The seal is important with a view to the meter's approval.

Test loop

Test loop includes six different main readings and three different sub-readings:

Test loop (Loop_4) Main		Test loop (Loop_4) Sub			Index number in display
1.0	High-resolution heat energy *)				4-001-00
		1.1	Heat energy (E1)		4-001-01
2.0	High-resolution cooling energy *)				4-002-00
		2.1	Cooling energy (E3)		4-002-01
3.0	High-resolution volume *)				4-003-00
		3.1	Volume		4-003-01
4.0	t1 (Inlet)				4-004-00
5.0	t2 (Outlet)				4-005-00
6.0	Flow				4-006-00

After 9 hours the meter reverts to energy reading in "User loop".

*) Register/resolution of the high-resolution registers are as follows: "0000001 Wh" and "00000.01 l"

Test-loop can only be displayed if the verification seal is broken and the switch activated. The high-resolution registers can only be reset in connection with a total reset.

Test connection

During test either optical reading head with USB plug (66-99-099) for serial reading of high-resolution energy and volume registers, or Pulse Interface (66-99-143) with optical reading head and connection unit for high-resolution pulse outputs is used. Do not forget that the meter must be in Test mode.

Verification pulses

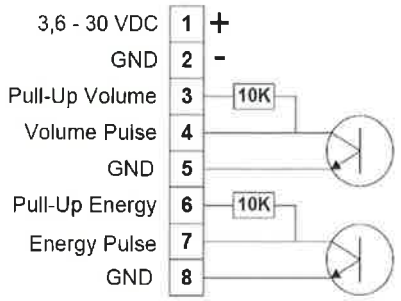

When Pulse Interface type 66-99-143 is connected to power supply or battery, the unit is placed on the meter, and the meter is in test mode, the following pulses are transmitted:

- High-resolution energy pulses (1 Wh/pulse) on terminals 7 and 8
- High-resolution volume pulses (10 ml/pulse) on terminals 4 and 5

Pulse Interface 66-99-143, technical data

Supply voltage	3.6 – 30 VDC
Current consumption	< 15 mA
Pulse outputs	< 30 VDC < 15 mA
Pulse duration	3.9 ms.
Energy pulse	1 Wh/pulse (1000 pulses/kWh)
Volume pulse	10 ml/pulse (100 pulses/litre)

Use of high-resolution pulses

High-resolution energy and volume pulses can be connected to the test stand used for calibration of the meter, or to Kamstrup Pulse Tester, type 66-99-279, as shown in the drawing below.

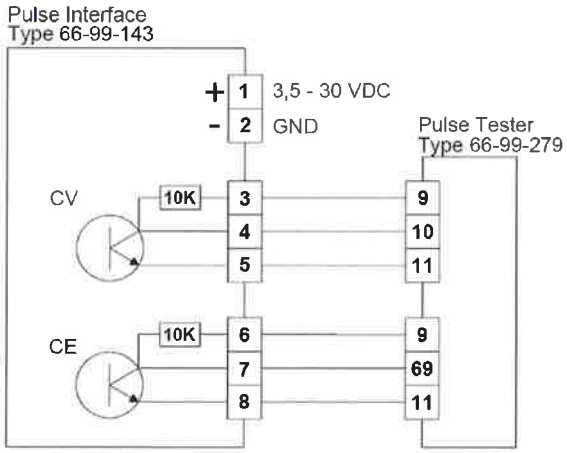

Auto-integration

The purpose of auto-integration is to test the calculator's accuracy. During auto-integration the water flow through the meter must be cut off to make it possible to read the volume and energy counted during auto-integration without the meter continuing normal counting in the registers afterwards.
At the beginning of an auto-integration the meter receives a serial data command with test volume and number of integrations over which the meter is to distribute the volume.

After auto-integration all volume and energy registers – incl. the high-resolution test registers – have been enumerated by the given volume and the calculated energies. Furthermore, the average of the temperatures measured during auto-integration has been saved in two registers, "t1 average inlet temperature" and "t2 average outlet temperature".

For calculation of accuracy the below-mentioned registers can be read after auto-integration:

Verification registers	
Heat energy	E1HighRes
Cooling energy	E3HighRes
Volume	V1HighRes
t1 average inlet temperature	t1average_AutoInt
t2 average outlet temperature	t2average_AutoInt

Handling different test methods

Standing start/stop
Standing start/stop is a method used for testing the flow sensor's accuracy. During the test the meter must be mounted in a flow test stand. The flow through the sensor is cut off. Subsequently, water flow is added for a certain period, during which the water passing through the sensor is collected. Having switched off the flow, the volume of the collected water is compared to the volume counted by the meter. In general, standing start/stop requires bigger test volume than flying start/stop.

Standing start/stop via display reading
Condition: MULTICAL® 403 must be in test mode (see "Test mode").
The high-resolution display readings are updated at 4-second intervals.

Standing start/stop using pulse outputs
Condition: MULTICAL® 403 must be in test mode (see "Test mode").
Verification pulses are connected as described in "Verification pulses" above.

Flying start/stop
Condition: MULTICAL® 403 must be in test mode (see "Test mode").
Verification pulses are connected as described in "Verification pulses" above.

"Flying start/stop" is the most frequently used method for testing the accuracy of flow sensors. During the test the meter must be mounted in a flow test stand and there is constant water flow through the sensor.

Verification pulses, as described in "Verification pulses", can be directly used for the test stand if it is designed to control the start/stop synchronization. Alternatively, Pulse Tester, type 66-99-279, can be used as external start/stop pulse counter.
As the meter calculates volume and energy every four seconds in test mode (see "Test mode"), the verification pulses will also be updated every four seconds as described in "Verification pulses". It is important to allow for this time interval, which means that the test duration from start to stop must be so long that the update time does not influence the measuring uncertainty to any very considerable extent.

Security measures

Sealing

S	Security seals. Covering release for PCB box (label or integrated part of PCB box)
H_T	Additional seal for inseparable temperature sensors
D	Module D marking (engraving or separate label)
T	Type marking
I	Installation seals (sealing wire or void labels)
A	Alternative approval marking
R	Re-verification marking

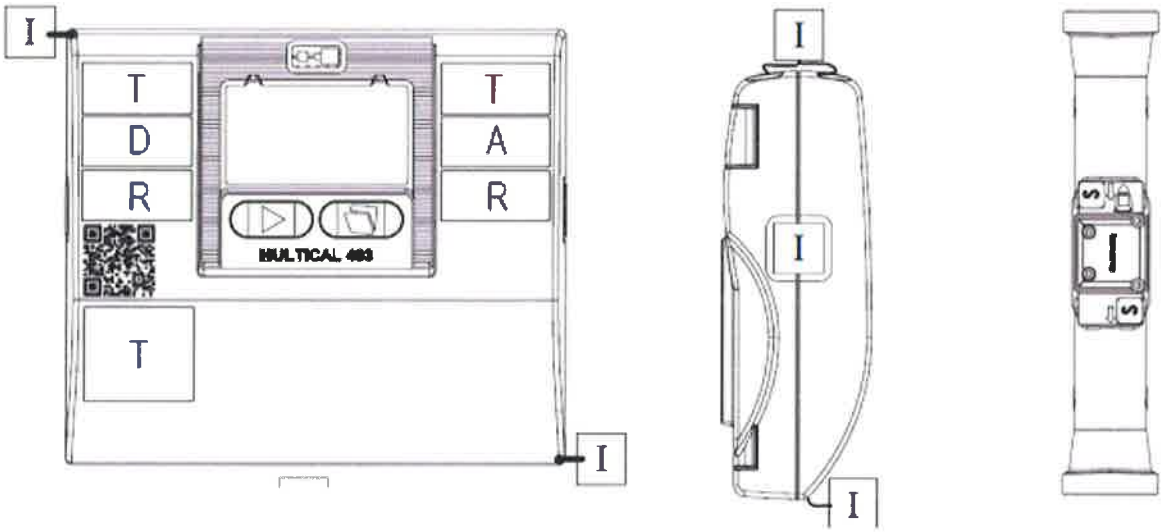

qp 3.5 to qp 15

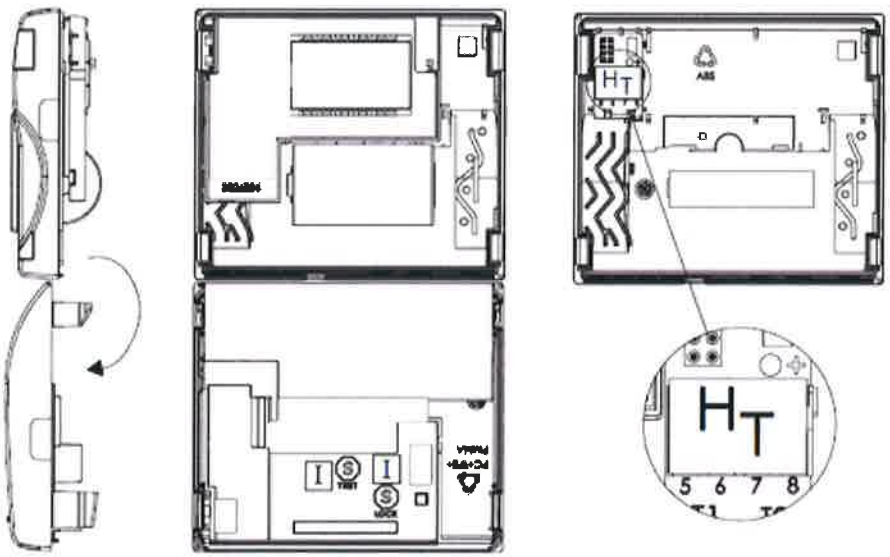

I Installation seals (Sealing wire or Void label)

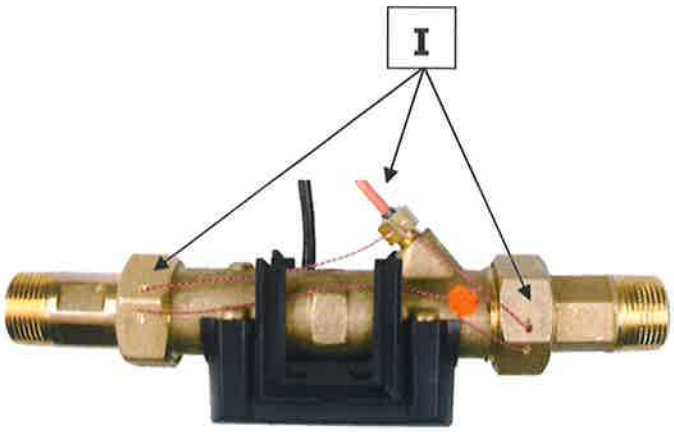

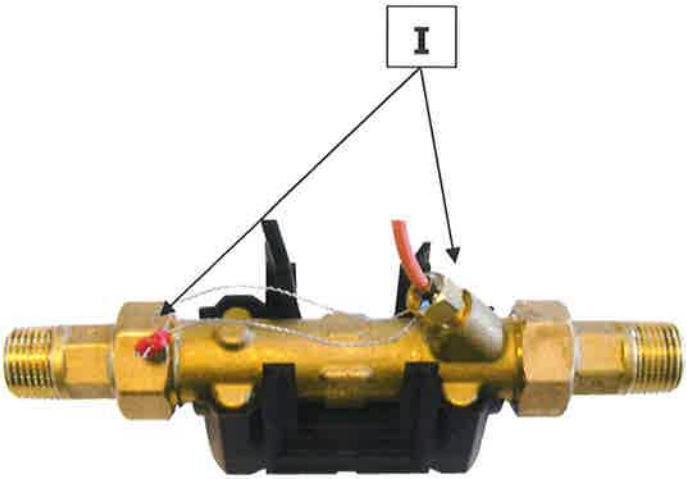

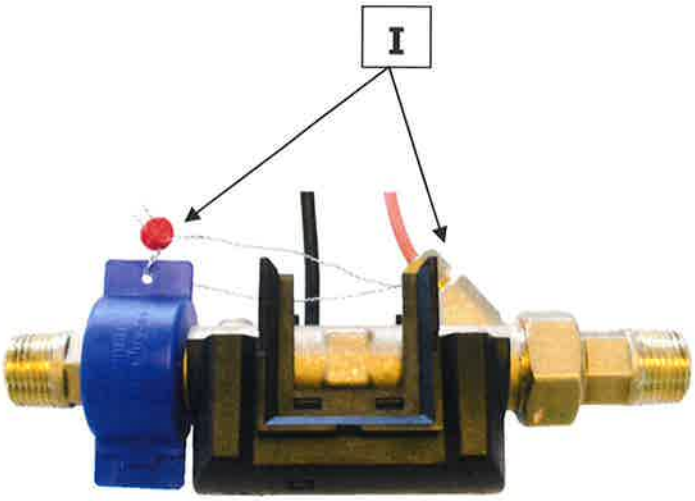

Inscriptions

Manufacturer postal address (on the base part/rear side)

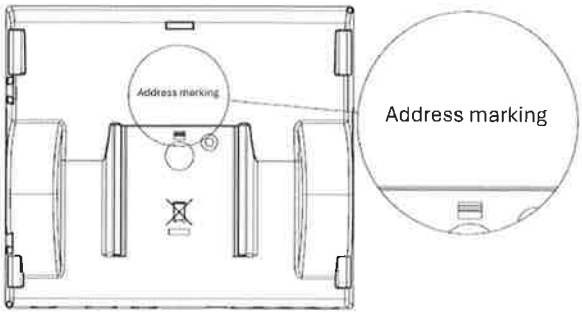

CE marking and the supplementary metrology marking
System designation (No. of the EU-type Examination Certificate)
Type, production year and serial number
Mechanical and electromagnetic environment classes
Climatic class (in the installation manual)
Temperature limits (θ_{min} ... θ_{max})
Differential temperature limits ($\Delta\Theta_{min}$ ... $\Delta\Theta_{max}$)
Temperature sensor type (Pt500 or Pt100)

Additional info in the display
Unit of measurement
Software version

Mounting the flow sensor in Inlet or in Outlet:

If the meter is set to be an inlet meter, the "Inlet arrow" is displayed.

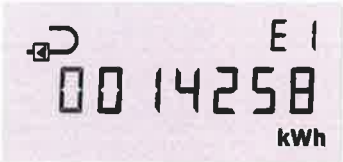

If the meter is set to be an outlet meter, the "Outlet arrow" is displayed.

Example of inscriptions for MULTICAL® 403

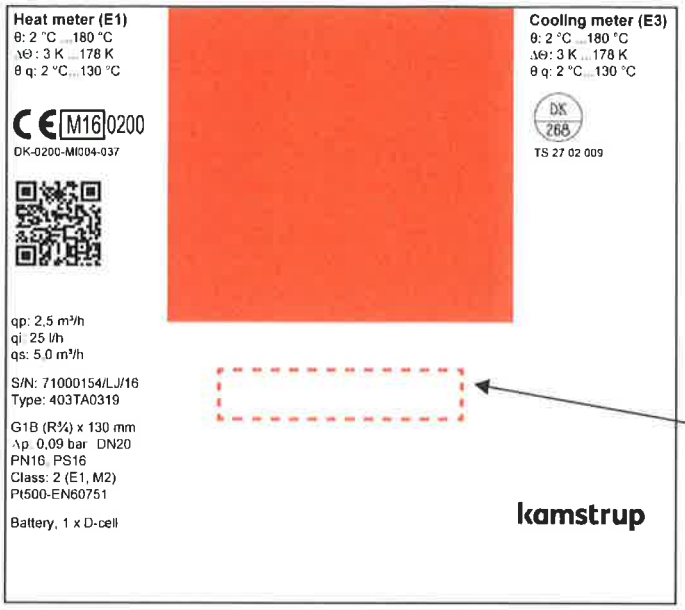

MULTICAL® 403 shown as an example with both the MID mark (to the left) and additional approval mark (to the right) outside the scope of the Measuring Instrument Directive

Customer specific area

Symbols, as an alternative to textual inscriptions, are acceptable, if explained in the installation manual.

Photos of MULTICAL® 403

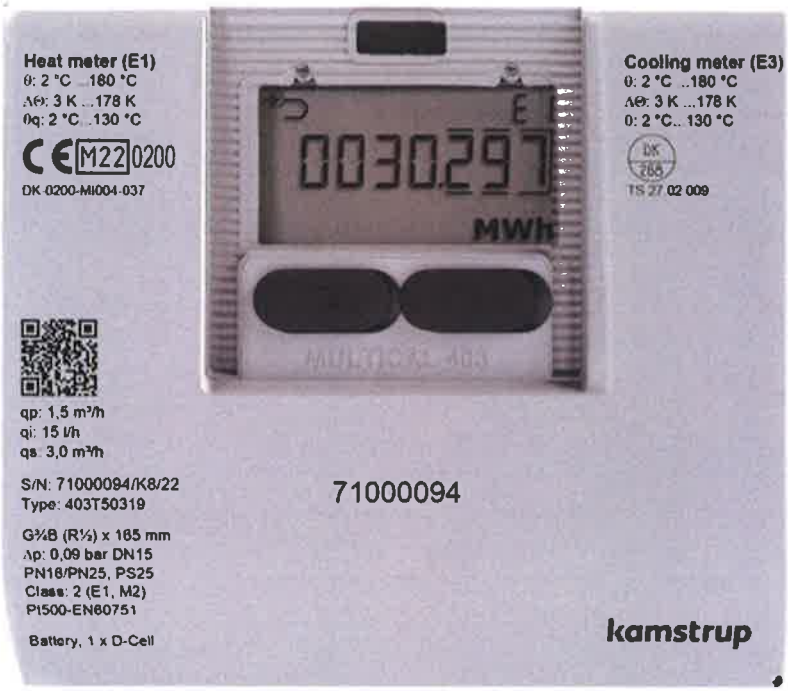

Informative Annex

Integrated functions not subject to the Measuring Instruments Directive:

Integrated bi-functional Heat/Cooling function

The MULTICAL® 403 is type tested as Heating, Cooling and as bi-functional Heating/Cooling energy meters according to EN 1434-4:2015+A1:2018 and EN 1434-4:2022.

On this basis the energy meter is national type approved for Cooling according to the Danish law[1], System designation TS 27.02 009.

The integrated bi-functional Heating/Cooling function can therefore be utilized under the operating conditions as described in this certificate.

The meter is type tested in the temperature differential range $\Delta\Theta_{min}$ ... $\Delta\Theta_{max}$: 2 K...178 K and can be used as so.

Re-verification

Re-verification of MULTICAL® 403 may be performed according to EN 1434-5 under the same conditions as stated in this certificate for verification of MULTICAL® 403, under consideration of national law.

Re-verification of the calculator as a heat meter or as a cooling meter is allowed, due to the extended type test.

During re-verification of the flow sensor a water temperature of 20 ± 5 °C can be used.

Calibration unit for MULTICAL® 403 as a calculator sub-assembly

Technical description, Document No.: 5512-3272

Type No.: 6699-366 (Pt500 2-Wire) or Type No.: 6699-367 (Pt100 2-Wire)

Temperature test points:

Heat: 44.3 °C – 41 °C = 3.3 K / 80 °C – 65 °C = 15 K / 160 °C – 20 °C = 140 K

Cooling: 15 °C – 18.3 °C = – 3.3 K / 6 °C – 20 °C = – 14 K

[1] BEK No. 1178 of 06/11/2014, Ordinance on metrological control of meters used for measuring consumption of cooling energy in district cooling systems and central cooling systems as amended by BEK. No. 549 of 01/06/2016.

Manufacturer, distributor or customer logo

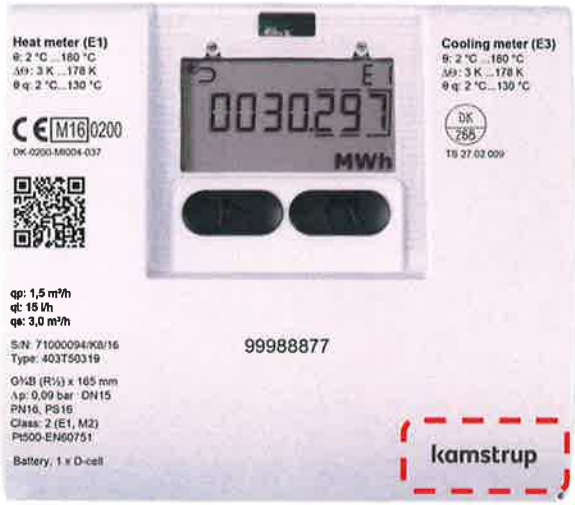

There may be a manufacturer, distributor or customer logo located at the lower right part of the front, shown in the dotted red marking.